more sensors, more solutions

R58E Series *Expert*™ Registration Mark Sensors

Registration Mark Sensor with Three-Color Light Source

Features

- Ultra-fast 10 kHz switching frequency
- Red, green, and blue LEDs evaluated during TEACH to optimize application contrast, with the best color automatically selected by the sensor; sensing beam colors also may be individually disabled
- Outstanding color contrast sensitivity; detects 16 levels of gray scale
- Smart gain-control algorithm to maximize performance in low-contrast or high-gloss applications
- Easy-to-set, automatic *Expert*-style configuration options include Static and Dynamic TEACH, plus Manual Adjust for fine tuning
- Easy-to-read 8-segment bargraph display indicator for TEACH and signal strength readout, plus indicators for continuous readout of output status and setup
- Fixed-convergent sensing at 10 mm ±3 mm (0.39" ±0.12")
- Rectangular 1.2 mm x 3.8 mm (0.05" x 0.15") sensing image at 10 mm (0.39") from the lens
- Parallel or perpendicular sensing image, depending on model (see below)
- Rugged zinc alloy die-cast housing with high-quality acrylic lens suitable for food processing applications; rated IP67, NEMA 6
- Easy selection of Light/Dark Operate (LO/DO), 30 ms pulse stretcher (OFF-delay), and 30 ms ON-delay, via push buttons or a remote input wire

Models

Models	Cable*	Focus	Supply Voltage	Output Type	Sensing Image Orientation
R58ECRGB1	5-wire 2 m (6.5')	10 mm (0.39")	10 to 30V dc	Bipolar NPN/PNP	Parallel to sensor length 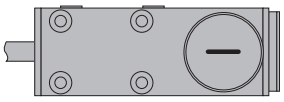
R58ECRGB1Q8	5-pin Euro-style integral QD				
R58ECRGB1Q	5-pin Euro-style QD pigtail				
R58ECRGB2	5-wire 2 m (6.5')				Perpendicular to sensor length 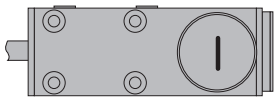
R58ECRGB2Q8	5-pin Euro-style integral QD				
R58ECRGB2Q	5-pin Euro-style QD pigtail				

* 9 m cables are available by adding suffix "**W/30**" to the model number of any cabled sensor (e.g., **R58ECRGB1 W/30**).
A model with a QD connector requires a mating cable; see page 10.

WARNING . . . Not To Be Used for Personnel Protection

Never use these products as sensing devices for personnel protection. Doing so could lead to serious injury or death.

These sensors do NOT include the self-checking redundant circuitry necessary to allow their use in personnel safety applications. A sensor failure or malfunction can cause either an energized or de-energized sensor output condition. Consult your current Banner Safety Products catalog for safety products which meet OSHA, ANSI and IEC standards for personnel protection.

Printed in USA 03/09 P/N 122928 rev. C

R58 *Expert*™ Registration Mark Sensors

Overview

R58 *Expert* (R58E) sensors offer maintenance-free solid-state reliability for typical color contrasts found in product and material registration applications. Fast 50-microsecond sensing response produces excellent registration repeatability, even in ultra-high-speed applications. This fast response, coupled with the small 1.2 x 3.8 mm (0.05" x 0.15") sensing image, allows the detection of even small and inconspicuous registration marks.

R58E sensors feature TEACH mode sensitivity adjustment by presenting two sensing conditions to the sensor. TEACH mode has two options: Static TEACH and Dynamic TEACH. Static TEACH is used to position the two sensing conditions individually. Dynamic TEACH provides a means for teaching a series of conditions on-the-fly; the R58E samples the sensing events and automatically sets the switchpoint between the lightest and darkest conditions. The sensor then determines which sensing condition is present for the shortest time and assigns the Output ON condition to that event (therefore, LO/DO selection is automatic). The LO/DO setting can then be reversed in SETUP mode.

The sensor uses a tri-color LED during either teach process and automatically selects a red, green, or blue sensing beam, based on the contrast between the registration mark and its background. For applications where the user wishes to select the sensing beam color, individual colors may be enabled/disabled in SETUP mode.

Sensitivity may be fine-tuned at any time by simply clicking the “+” or “-” buttons on the sensor. The eight-element bargraph display clearly displays the relative received signal strength.

The discrete bipolar (one NPN and one PNP) outputs may be configured in SETUP mode to include a 30-millisecond ON-delay and/or OFF-delay, if required.

TEACH and SETUP configuration may be accomplished either by using the push button on the sensor, or by supplying input pulses via the remote TEACH input. The push buttons may be diabled via the remote input.

The construction of the R58E is extremely robust, with a die-cast metal housing, plastic optics, and IP67 and NEMA 6 leakproof design for harsh sensing environments.

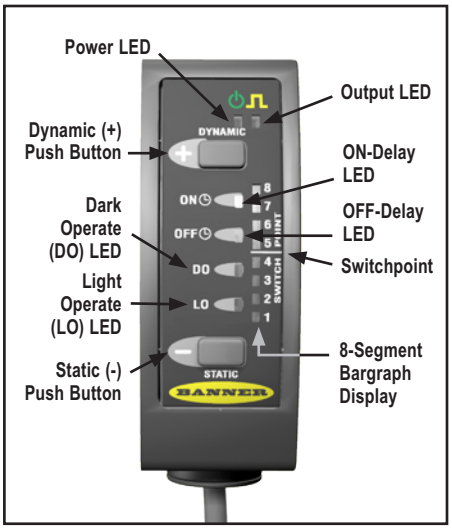

Figure 1. Sensor features

Sensor Configuration

The R58E is pre-set to power up in RUN mode and sense the most recently taught registration mark. The sensitivity of the R58E may be quickly optimized by using one of two available TEACH modes: Static TEACH or Dynamic TEACH.

- **Static TEACH:** Both the Output ON and Output OFF conditions are presented, and sensitivity can be adjusted manually via the push buttons.
- **Dynamic TEACH:** The registration mark is presented during actual sensing conditions, and the sensitivity can be adjusted manually via the push buttons.

Remote TEACH

The sensor may be configured either via its push buttons, or via a remote switch. Remote configuration also may be used to enter SETUP mode to set ON- and OFF-delay, and to disable the push buttons to prevent unauthorized adjustment of the configuration settings. To access this feature, connect the gray wire of the sensor to 0V dc, with a remote switch between the sensor and 0V dc.

Configuration is accomplished by following the sequence of input pulses (see following procedures). The duration of each pulse (corresponding to a push button “click”), and the period between multiple pulses, are defined as “T”:

0.04 seconds ≤ “T” ≤ 0.8 seconds

Status Indicators

LED	Indicates
Power	**ON Green:** RUN mode **OFF:** TEACH or SETUP mode
Output	**ON Yellow:** Output is conducting, or TEACH Output ON condition **OFF:** Output is not conducting, or TEACH Output OFF condition
Light Operate	**ON Green:** Light Operate (LO) operation
Dark Operate	**ON Green:** Dark Operate (DO) operation
OFF-Delay	**ON Green:** 30 ms pulse stretcher (OFF-delay) is active **OFF:** No OFF-delay
ON-Delay	**ON Green:** 30 ms ON-delay is active **OFF:** No ON-delay
8-Segment Bargraph Display	**ON Red:** RUN mode — Indicates signal strength with respect to the sensing threshold (switchpoint); higher segment number for higher sensing contrast TEACH mode — Indicates relative contrast SETUP mode — Displays sensing beam LED color (see Figure 5) **OFF:** TEACH or SETUP mode — Sensor configuration active

R58 *Expert*™ Registration Mark Sensors

Static TEACH

In Static TEACH mode, the sensor learns two sensing conditions after each is presented one time. The sensor automatically positions the switchpoint midway between the two conditions. See Figure 3.

NOTE: The sensor will return to RUN mode if either TEACH condition is not registered within 60 seconds. TEACH mode may be cancelled by pressing and holding the Static push button for ≥ 2 seconds. In either case, the sensor will revert to the previous conditions taught (i.e., exit without save).

Static TEACH and Manual Adjust

Sensitivity may be adjusted at any time when the sensor is in RUN mode by clicking the "+" and "-" buttons. Each click translates to 1/2 segment on the signal strength bargraph display. For best sensing reliability, both sensing conditions should register equally distant from the switchpoint on the signal strength bargraph display.

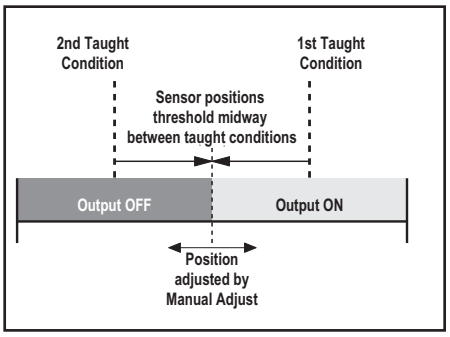

Figure 2. Static TEACH (Light Operate shown)

	Procedure		Result
	Push Button 0.04 sec. ≤ "click" ≤ 0.8 sec.	**Remote Line** 0.04 sec. ≤ "T" ≤ 0.8 sec.	
Access TEACH Mode	• Push and hold the Static push button for > 2 seconds.	• No action required; sensor is ready for the 1st sensing condition.	**(push button only)** **LO and DO:** Alternately flash Green **Output:** ON Yellow (indicating ready to teach 1st sensing condition) **Bargraph display:** Goes OFF
Teach 1st Sensing Condition	• Present the 1st sensing condition. • "Click" the Static push button.	• Present the 1st sensing condition. • Single-pulse the remote line. • Wait at least 0.8 seconds. T 0.8 seconds	**LO and DO:** Alternately flash Green **Output:** OFF (indicating ready to teach 2nd sensing condition) **Bargraph display:** Remains OFF
Teach 2nd Sensing Condition	• Present the 2nd sensing condition. • "Click" the Static push button.	• Present the 2nd sensing condition. • Single-pulse the remote line. T	**Teach Accepted** • Bargraph display flashes one segment for three seconds to indicate relative contrast (see contrast table on page 5). • Sensor enters RUN mode. **Teach Unacceptable** • Pairs of bargraph display segments flash for three seconds to indicate low contrast. • Sensor returns to TEACH 1st sensing condition.

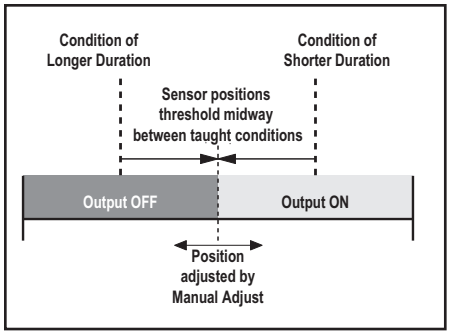

Figure 3. Dynamic TEACH (Light or Dark Operate, depending on the sensing condition shown)

Bargraph Display Segment*	Relative Contrast / Recommendation
6 to 8	**Excellent:** Very stable operation.
4 to 5	**Good:** Minor sensing variables will not affect sensing reliability.
2 to 3	**Low:** Minor sensing variables may affect sensing reliability.
1	**Poor:** Consider an alternate sensing scheme.

*Following TEACH

NOTE: High contrast relates directly to sensing reliability; high-contrast sensing applications are most tolerant of sensing variables (e.g., web flutter or variations in registration mark color and print density).

Dynamic TEACH

Dynamic TEACH is used to configure sensitivity during actual sensing conditions, when looking for a mark against its background condition. The R58E takes multiple samples of the registration mark against its background material and automatically positions the threshold at the optimum level. See Figure 2. *The registration mark must be presented at least two times during Dynamic TEACH.*

When Dynamic TEACH is used, the Output ON state will be the shorter duration (smaller) event sensed, and LO/DO will be set accordingly. To change the output state, change to either LO or DO in SETUP mode, or pulse the remote line three times (see page 8).

Maximum Feed Rate

In order to optimize performance and ensure that all LED color and gain combinations are evaluated during Dynamic TEACH, the registration mark must encompass the 1.2 mm dimension of the 1.2 mm x 3.8 mm sensing image for at least 0.002 seconds. Therefore, the maximum feed rate can be determined with the following formula:

Maximum Feed Rate in mm/sec. = (registration mark width in mm – 1.2) / 0.002

Example with a 5 mm registration mark:

Maximum Feed Rate = (5 mm – 1.2) / 0.002 = 1900 mm/sec.

NOTE: Registration marks narrower than the 1.2 mm sensing image width can be detected at feed rates less than 600 mm/sec, but the contrast will be reduced, due to averaging of the background and the registration mark.

Dynamic TEACH and Manual Adjust

Sensitivity may be adjusted at any time when the sensor is in RUN mode by clicking the "+" and "-" buttons. Each click translates to 1/2 segment on the bargraph display. For best sensing reliability, the light and dark conditions should register equally distant from the switchpoint on the bargraph display.

	Procedure		Result
	Push Button	**Remote Line**	
Access TEACH Mode	• Press and hold the Dynamic push button for > 2 seconds.	• Hold the remote line low for > 2 seconds. > 2 seconds	**LO and DO:** Alternately flash Green **Output:** OFF **Bargraph display:** Goes OFF
Teach Sensing Conditions	• Continue to hold Dynamic push button. • Present sensing conditions (present registration mark at least twice).	• Continue to hold the remote line low. • Present sensing conditions (present registration mark at least twice).	**LO and DO:** Alternately flash Green **Output:** OFF **Bargraph display:** Remains OFF
Return to RUN Mode	• Release the Dynamic push button.	• Release remote line/switch.	**Teach Accepted** • Bargraph display flashes one segment for three seconds to indicate relative contrast (see contrast table above). • Sensor enters RUN mode. **Teach Unacceptable** • Pairs of bargraph display segments flash in unison for three seconds to warn of unacceptably low contrast. • Sensor returns to RUN mode without changing settings.

R58 *Expert*™ Registration Mark Sensors

SETUP Mode

SETUP mode is used to configure discrete sensor output response for:

- Light or Dark Operate
- 30-millisecond pulse stretcher (OFF-delay), if required
- 30-millisecond ON-delay, if required.

It is also used to disable one or more sensing beam colors, to force the sensor to use a particular color. It will be necessary to access SETUP mode only if the settings which result from TEACH mode configuration are not the settings required for the application or if a delay is required. The status LEDs indicate the output response configuration when the sensor is in RUN mode, as shown in Figure 4.

Change the output response settings or disable sensing beam color(s) as shown in the table on page 7.

NOTE: If SETUP mode programming is interrupted and remains inactive for 60 seconds, the sensor returns to RUN mode with the most recent settings (i.e., exits and saves current selection).

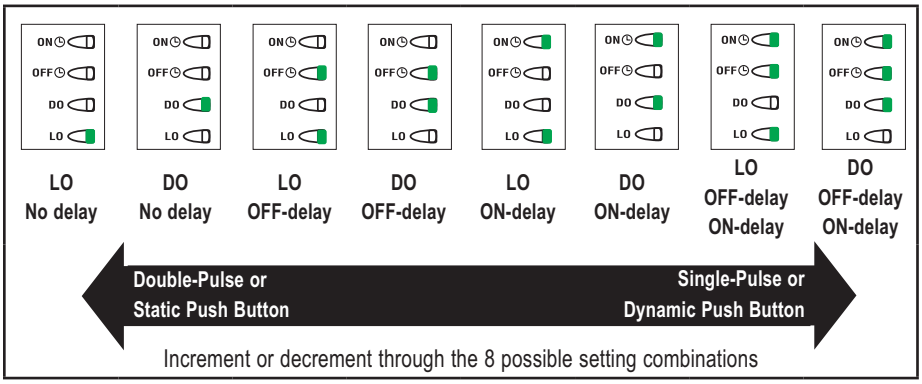

Figure 4. Output response configuration options

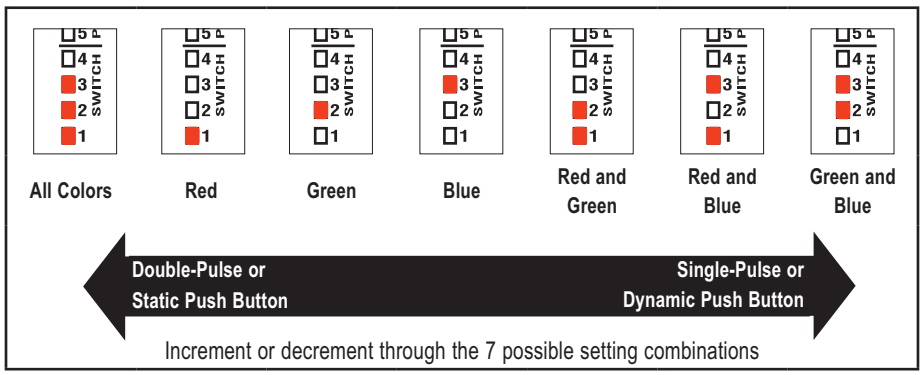

Figure 5. LED color configuration options

SETUP Configuration

	Procedure		Result
	Push Button 0.04 sec. ≤ "click" ≤ 0.8 sec.	**Remote Line** 0.04 sec. ≤ "T" ≤ 0.8 sec.	
Enter SETUP Mode	• Press and hold both push buttons > 2 seconds.	• Double-pulse the remote line.	• 8-Segment display turns OFF. • Sensor is in SETUP mode.
Select LO/DO and Delay Settings (see Figure 4)	• Release push buttons.	• Wait > 8 seconds.	• Sensor is ready to select a new setting combination.
	• Click Static (–) or Dynamic (+) push button to toggle between choices:Dynamic (+) — increment Static (–) — decrement or	• Enter sequential pulses to toggle between choices: Single-pulse — increment Double-pulse — decrement or	• Sensor steps between LO/DO and Delay setting combinations, as shown in Figure 4.
LO/DO Setting Shortcut	• Not available using push buttons.	• From RUN mode, three-pulse the remote line.	• Sensor toggles between LO/DO settings on-the-fly, and continues in RUN mode.
Enter Sensing Beam Color Select Mode (from SETUP Mode)	• From SETUP mode, press and hold Dynamic (+) push button > 2 seconds.	• From SETUP mode, four-pulse the remote line.	• Sensor displays currently selected sensing beam color combinations, as shown in Figure 5. • Visible sensing beam also provides indication of enabled sensing beam color(s).
Enable/Disable Sensing Beam Colors (see Figure 5)	• Click Static (–) or Dynamic (+) push button to toggle between choices:Dynamic (+) — increment Static (–) — decrement or	• Enter sequential pulses to toggle between choices: Single-click — increment Double-click — decrement or	• Sensor steps between possible sensing beam color combinations, as shown in Figure 5.* • Visible sensing beam also provides indication of enabled sensing beam color(s).
Return to SETUP/RUN Mode	• Press and hold Static (–) push button > 2 seconds to return to SETUP mode.	• Four-pulse the remote line to return to SETUP mode.	• Sensor returns to RUN mode with new settings. • These steps will return to RUN mode from both SETUP modes.
	• Then press and hold both push buttons > 2 seconds to return to RUN mode.	• Hold the remote line low > 2 seconds to return to RUN mode. > 2 seconds	
	• Or wait > 60 seconds.	• Or wait > 60 seconds.	

*If the new color setting has only one sensing beam color enabled, the sensor will switch to that color for sensing.
If the new color setting has multiple sensing beam colors enabled, the sensor will use the color that was active prior to configuration; following the next TEACH procedure, it will select the enabled sensing beam color that has the greatest contrast.

R58 *Expert*™ Registration Mark Sensors

Push Button Enable/Disable (Lockout)

In addition to its configuration function, the remote input may be used to disable the push buttons for security. Disabling the push buttons prevents unauthorized adjustment of the configuration settings. Connect the gray wire of the sensor as described on page 3, and four-pulse to either enable or disable the push buttons (0.04 sec. ≤ "T" ≤ 0.8 sec.):

NOTE: Push buttons can be disabled/enabled from the remote line only.

Installation Notes

The R58E includes a total of eight size M5 threaded holes used for mounting (see dimension drawing on page 11). These threaded holes are positioned to match the mounting hole patterns common to other registration mark sensors. The R58E includes four M5 x 0.8 x 6 mm stainless steel cap screws and a hex key wrench.

The R58E focus is 10 mm (0.39") from the lens surface. The R58E must be mounted within 3 mm (0.12") of this distance from the surface of the material for reliable sensing (Figure 6). Consider the following when mounting the R58E:

- Whenever possible, it is a good idea to sense a web material at a location where it passes over a tension bar or roller, to minimize the adverse effects of web "flutter" or sag (Figure 7).
- When sensing a registration mark on a reflective (shiny) material, mount the R58E at an angle which places the lens centerline at approximately 15° off perpendicular to the material's surface (Figure 8). This "skew angle" will minimize strong direct reflections (which tend to overwhelm the sensor), and allow the sensor to discern the relatively small optical contrast offered by differences in colors.
- Clear materials are poor reflectors of light. When sensing a mark printed on a clear material (e.g., a clear poly web), position a reflective surface directly behind the clear material to return light to the R58E. The printed mark, regardless of its color, then becomes the dark condition, as it blocks the light from reaching the reflective surface. Most clear materials are also shiny; it is important to include a 15° skew angle when sensing clear materials (Figure 8).

Lens Location

The lens may be installed at either of two lens ports (see Figure 6). The lens and the lens port cap are both threaded and may be exchanged by hand; no tools are required. The lens and cap both include an o-ring seal.

NOTE: The lens port cap must be installed on the unused port for reliable operation. Fully seat the lens cap to ensure a liquid-tight seal.

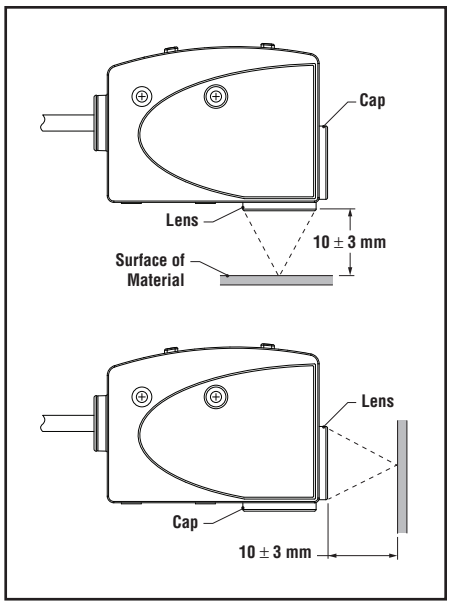

Figure 6. R58E lens positions

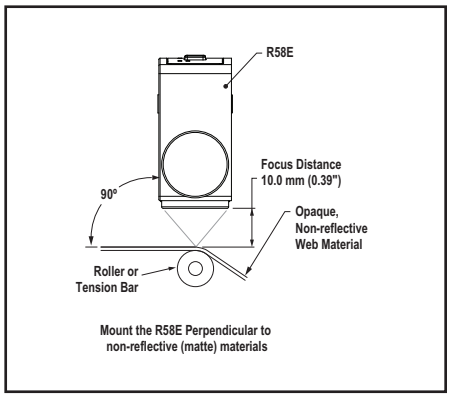

Figure 7. Mounting for sensing opaque non-reflective materials

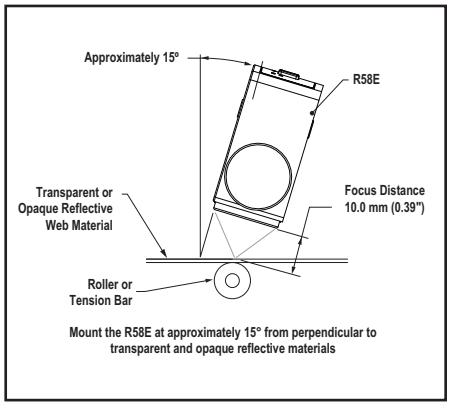

Figure 8. Mounting for sensing opaque reflective and transparent materials

R58 *Expert*™ Registration Mark Sensors

Specifications

Supply Voltage and Current	10 to 30V dc (10% max. ripple); **Supply current** (exclusive of load current): 75 mA @ 10V dc 35 mA @ 30V dc
Supply Protection Circuitry	Protected against reverse polarity and transient voltages
Output Configuration	Outputs are bipolar: one current sourcing (PNP) and one current sinking (NPN) open-collector transistor
Output Rating	100 mA max. (each output) **OFF-state leakage current:** NPN < 200 microamps; PNP < 10 microamps (see Application Note 1) **NPN saturation:** < 1.6V @ 100 mA **PNP saturation:** < 3V @ 100 mA
Output Protection Circuitry	Protected against false pulse on power-up and continuous overload or short-circuit of outputs.
Output Response Time	50 microseconds NOTE: 1 second delay on power-up; outputs do not conduct during this time.
Repeatability	15 microseconds
Tri-Color LED Sensing Image	Rectangular: 1.2 mm x 3.8 mm (0.05" x 0.15") at 10 mm (0.39") from face of lens; image oriented either parallel or perpendicular to sensor length, depending on model (see page 1). **Red:** 636 nm **Green:** 525 nm **Blue:** 472 nm
Adjustments	**Using push buttons ("+" Dynamic and "-" Static):** Manually adjust discrete output switchpoint using "+" or "-" buttons Dynamic TEACH (teach on-the-fly) sensitivity adjustment Static TEACH sensitivity adjustment Light operate/Dark operate OFF-delay/ON-delay Sensing beam color enable/disable **Using Remote TEACH input (gray wire):** Dynamic TEACH (teach on-the-fly) sensitivity adjustment Static TEACH sensitivity adjustment Light operate/Dark operate OFF-delay/ON-delay Sensing beam color enable/disable Disable push buttons for security
Indicators	**8-segment Bargraph display:** Red signal strength indicator relative to taught signal level; higher segment number for higher sensing contrast **Light Operate:** Green **OFF-Delay:** Green **Dark Operate:** Green **ON-Delay:** Green **Outputs Conducting:** Yellow **Power/Run Mode:** Green
Construction	Zinc alloy die-cast and steel housing with black painted finish and o-ring sealed lens and lens port cap. **Lens:** Acrylic **Lens port cap and lens holder:** ABS **Push buttons:** Thermoplastic elastomer **Labels:** Polycarbonate
Environmental Rating	IEC IP67; NEMA 6
Connections	PVC-jacketed 5-conductor 2 m (6.5') or 9 m (30') attached cable with internal strain relief, integral 5-pin Euro-style QD fitting, or 150 mm (6") pigtail with 5-pin Euro-style QD fitting. Mating QD cordsets are purchased separately. See Quick-Disconnect cordsets on page 10.
Operating Conditions	**Temperature:** −10° to +55° C (+14° to 131° F) **Storage Temperature:** −20° to +80° C (−4° to +185° F) **Maximum Relative Humidity:** 90% at 50° C (non-condensing)
Vibration and Mechanical Shock	All models meet IEC 68-2-6 and IEC 68-2-27 testing criteria.
Application Notes	1. NPN OFF-state leakage current is < 200 µA for load impedances > 3kΩ or optically isolated loads. For load current of 100 mA, leakage is < 1% of load current. 2. Do not mount the sensor directly perpendicular to shiny surfaces; position it at approximately a 15° angle in relation to the sensing target (see page 8). 3. Minimize web or product "flutter" whenever possible to maximize sensing reliability.

R58 *Expert*™ Registration Mark Sensors

Dimensions

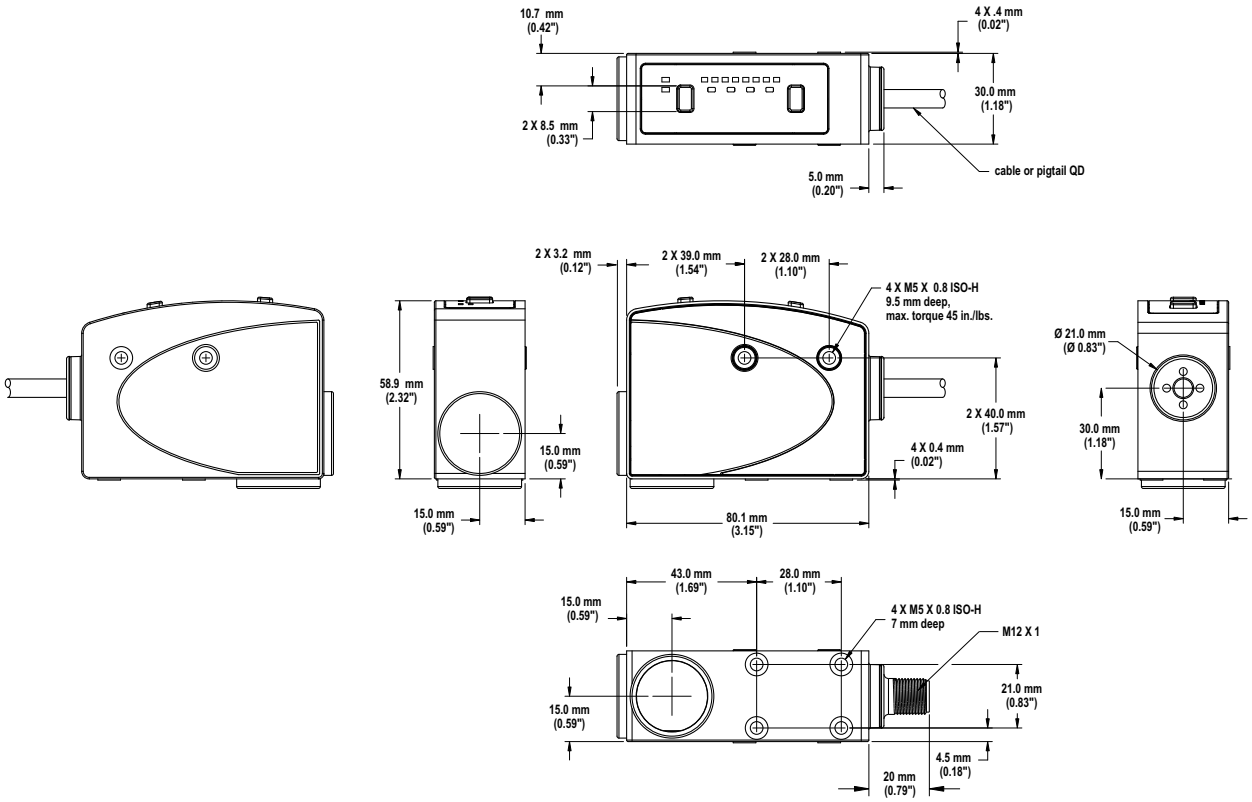

Hookups

Cabled Models

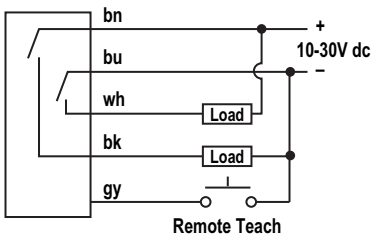

Quick-Disconnect Models

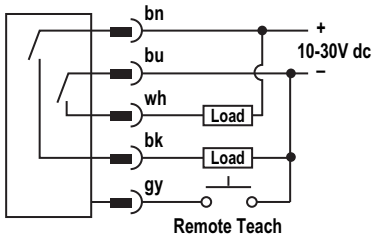

Accessories

Quick-Disconnect Cordsets

Style	Model	Length	Dimensions	Pinout
5-pin Euro-style straight, with shield	**MQDEC2-506** **MQDEC2-515** **MQDEC2-530**	2 m (6.5') 5 m (15') 9 m (30')	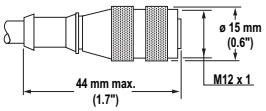	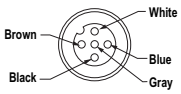

R58 *Expert*™ Registration Mark Sensors

Accessory Mounting Brackets

SMB55A	• 15° offset bracket • 12-gauge stainless steel

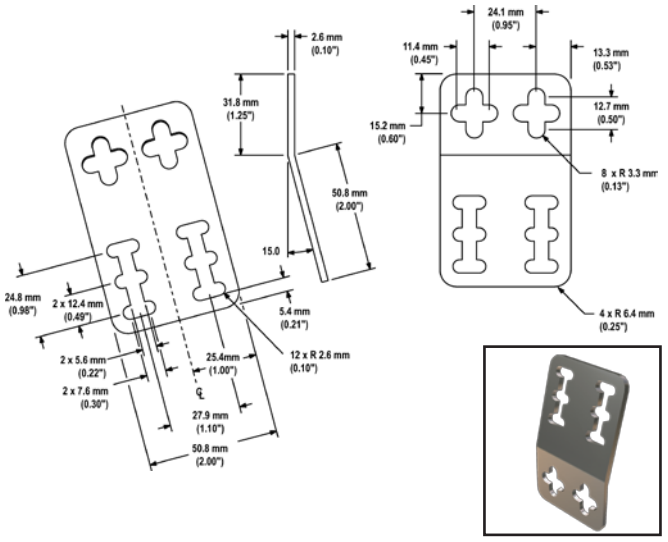

SMB55F	• Flat-mount bracket • 12-gauge stainless steel

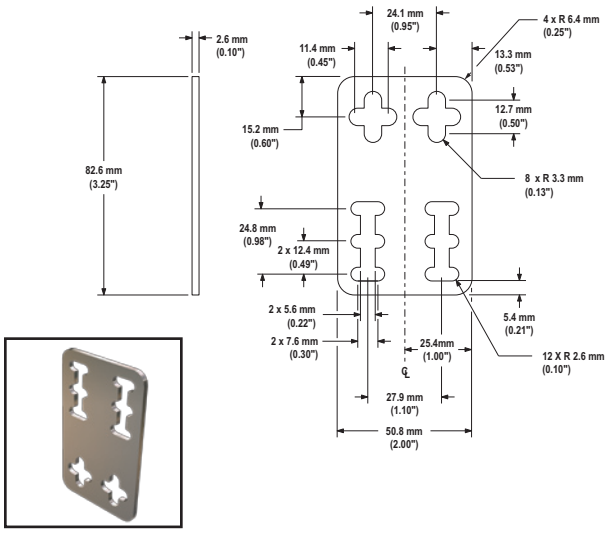

SMB55RA	• Right-angle bracket • 12-gauge stainless steel

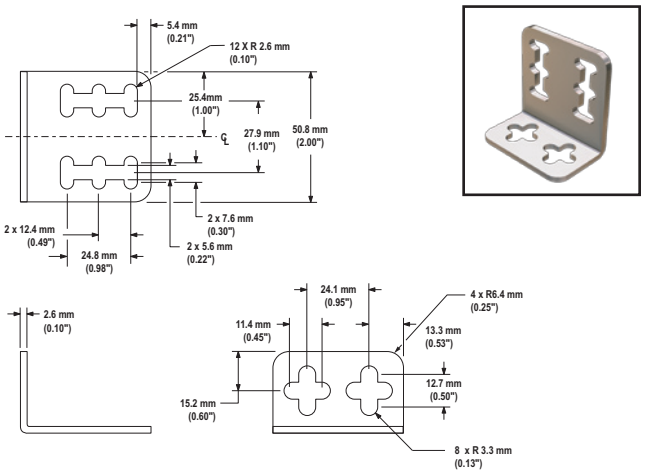

SMB55S	• 15° offset bracket • 12-gauge stainless steel

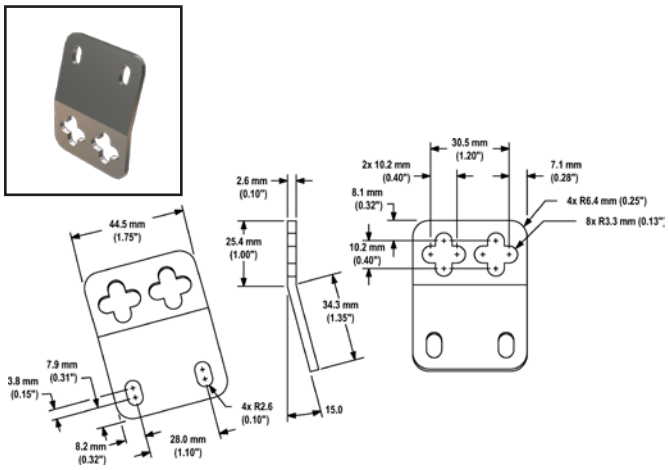

Replacement Lens

Model	Description
UC-R55	Replacement lens for R58E

R58 *Expert*™ Registration Mark Sensors

more sensors, more solutions

P/N 122928 rev. C

WARRANTY: Banner Engineering Corp. warrants its products to be free from defects for one year. Banner Engineering Corp. will repair or replace, free of charge, any product of its manufacture found to be defective at the time it is returned to the factory during the warranty period. This warranty does not cover damage or liability for the improper application of Banner products. This warranty is in lieu of any other warranty either expressed or implied.

Banner Engineering Corp., 9714 Tenth Ave. No., Minneapolis, MN USA 55441 • Phone: 763.544.3164 • www.bannerengineering.com • Email: sensors@bannerengineering.com